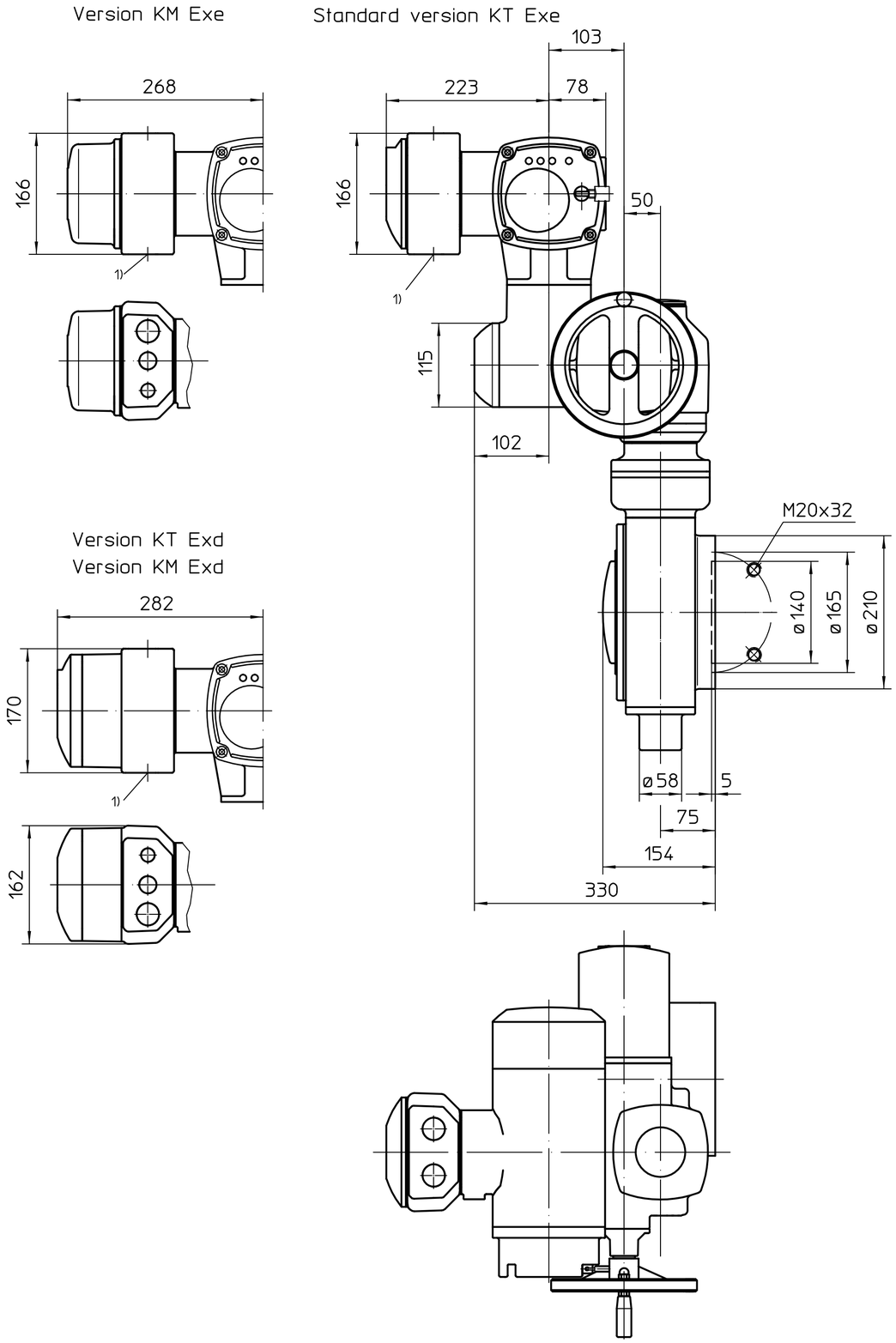

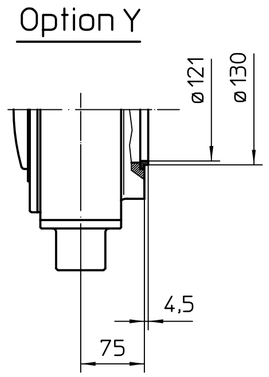

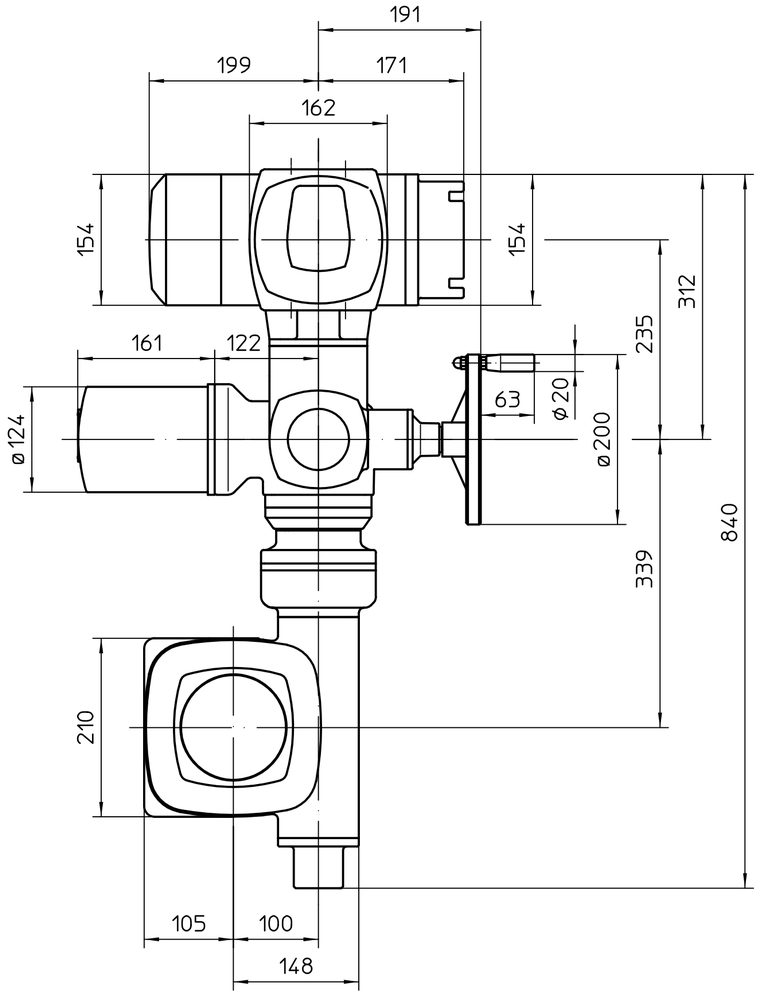

Mounting position A

1) Thread for cable entries acc. to order acknowledgement or technical data sheet

All dimensions in mm

For all other dimensions of actuators/gearboxes, refer to the latest dimension sheet issue

State	Revision	Date	Name

	Date	Name
Edited	2018-08-09	Goltsev
Checked	2018-08-09	Mayer
Rel.	2018-08-09	Goltsev

Scale 1:5

AUMA Riester GmbH & Co. KG
P.O. Box 1362
79373 Muellheim/Germany
Tel. +49 7631 809-0
Fax +49 7631 13218

auma® AUMA Riester GmbH & Co. KG

SA(R)Ex10.2-AC2 -GS100.3-F16-RR-RL

U2.5785

Page 1

Qty 1

126:1 / 160:1 / 208:1 - KT/KM

This drawing is subject to the provisions on copyright protection.