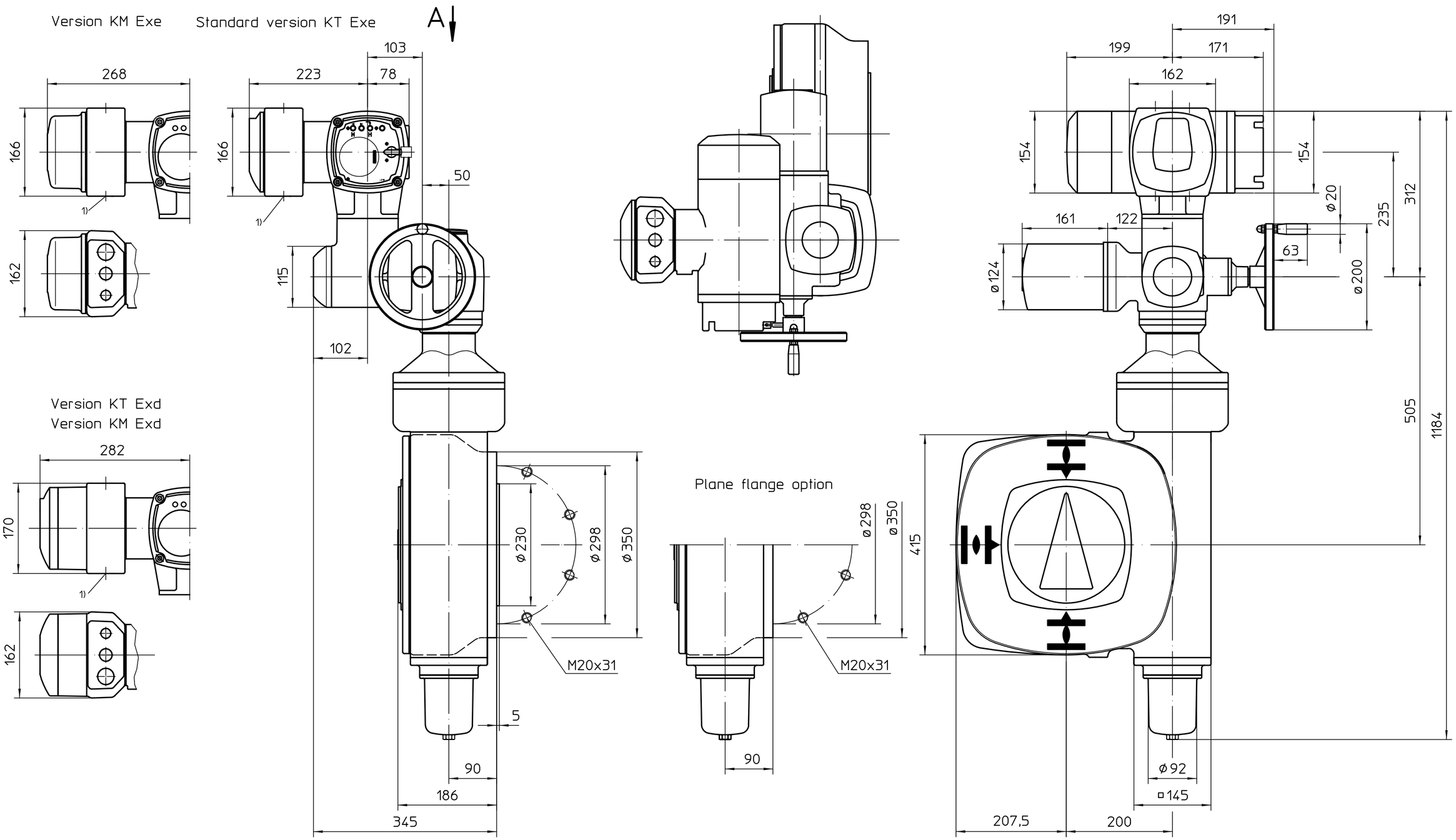

Mounting position A

1) Thread for cable entries acc. to order acknowledgement or technical data sheet

All dimensions in mm

For all other dimensions of actuators/gearboxes, refer to the latest dimension sheet issue

State	Revision	Date	Name

	Date	Name
Edited	2021-05-17	Goltsev
Checked	2021-05-21	Demir
Rel.	2021-05-21	Goltsev

AUMA Riester GmbH & Co. KG
P.O. Box 1362
79373 Muellheim/Germany
Tel. +49 7631 809-0
Fax +49 7631 13218

Scale 1:5

auma®
AUMA Riester GmbH & Co. KG

SA(R)Ex10.2-AC2
-GS200.3-F30-RR-RL

U2.6838

Page 1
Qty 1

214:1 / 434:1 - KT / KM

This drawing is subject to the provisions on copyright protection.