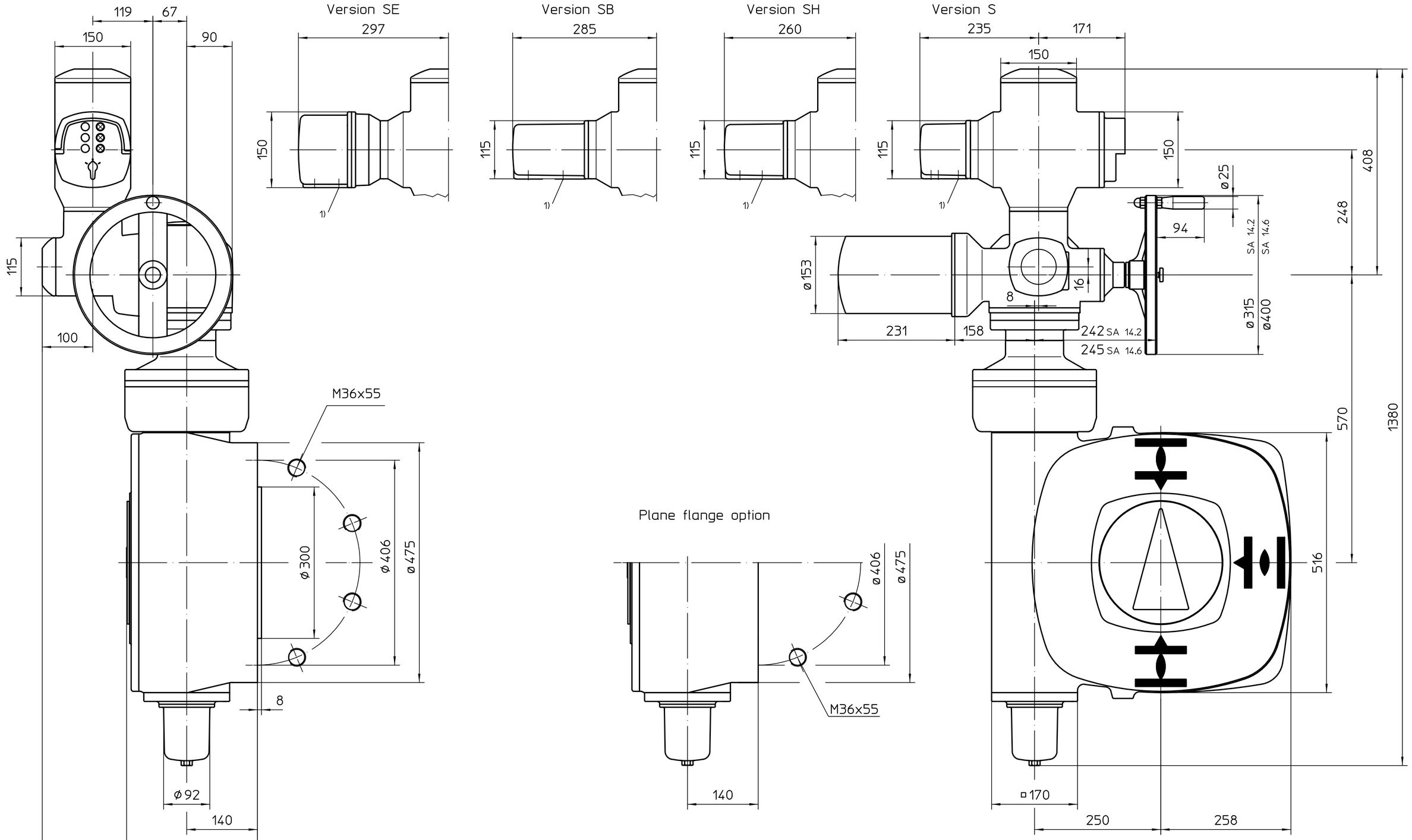

*also valid for: SA14.6

Mounting position A

1) Thread for cable entries acc. to order acknowledgement or technical data sheet

All dimensions in mm

For all other dimensions of actuators/gearboxes, refer to the latest dimension sheet issue

This drawing is subject to the provisions on copyright protection.

State	Revision	Date	Name

Scale 1:5

	Date	Name
Edited	2021-06-23	Goltsev
Checked	2021-06-23	Demir
Rel.	2021-06-23	Goltsev

AUMA Riester GmbH & Co. KG
P.O. Box 1362
79373 Muellheim/Germany
Tel. +49 7631 809-0
Fax +49 7631 13218

auma®
AUMA Riester GmbH & Co. KG

SA(R)14.2-AM -GS250.3-F40-LL-LR

U2.6893

Page 1
Qty 1

* - SA14.6 - 214:1/434:1