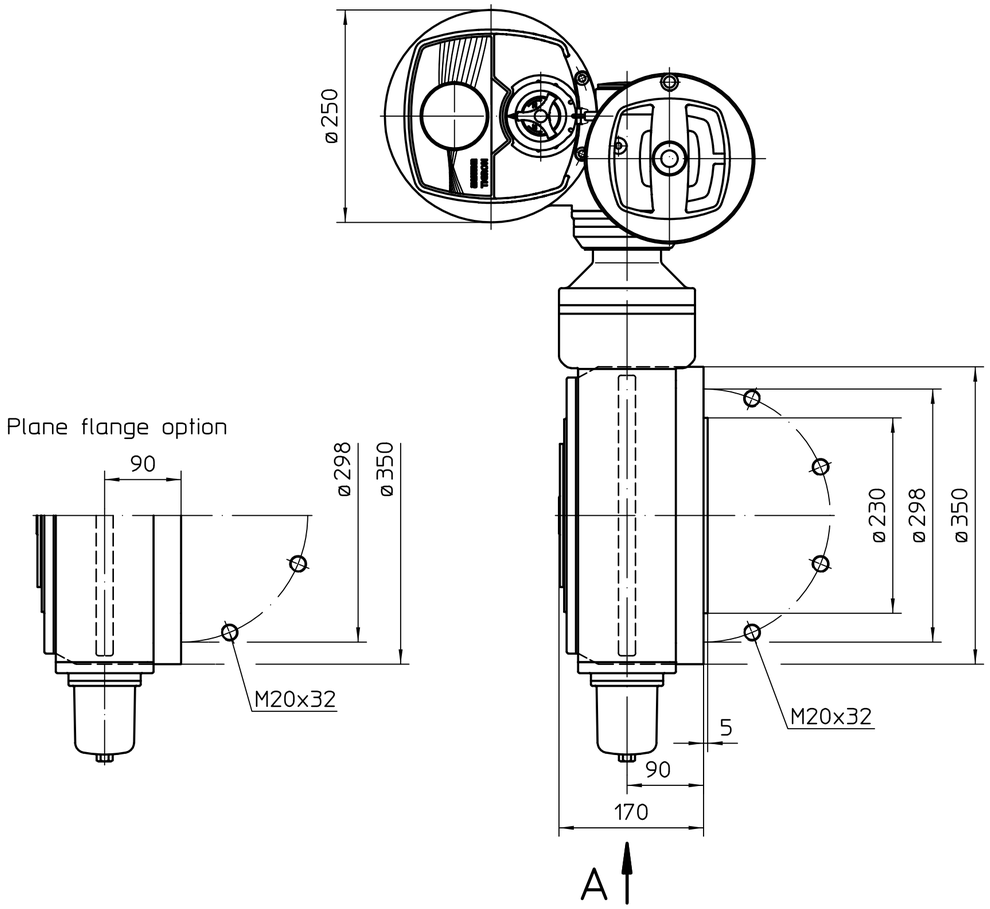

Option
Electrical connection
in "Ex d" version

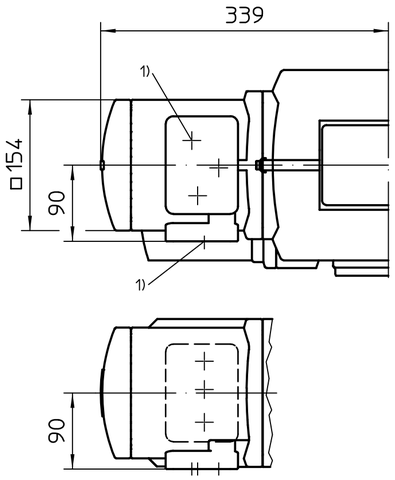

Standard
Electrical connection
in "Ex e" version

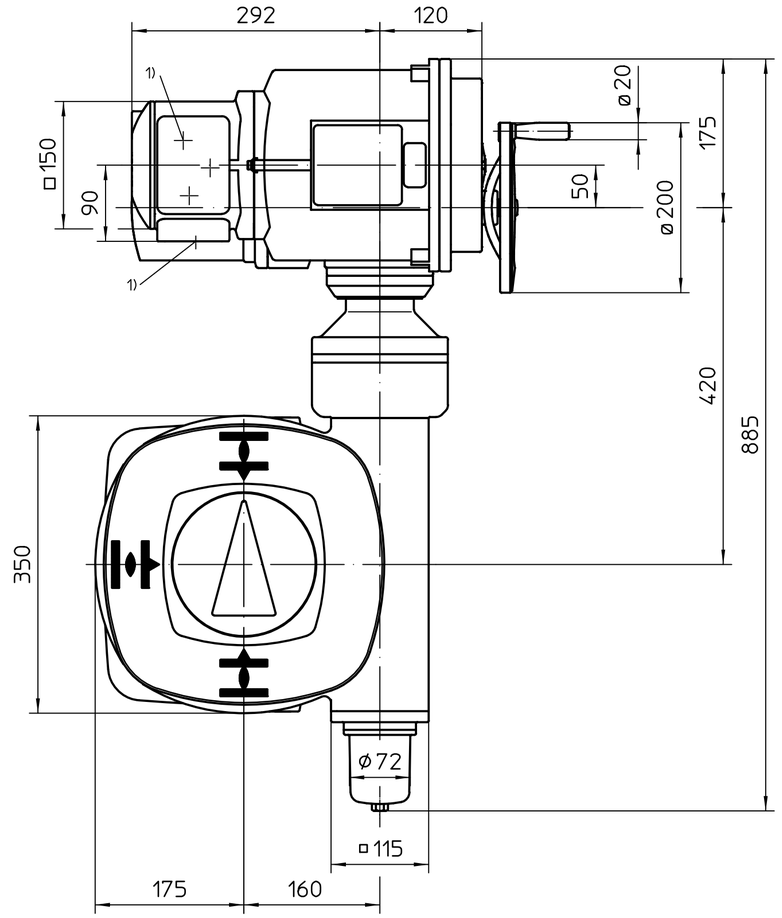

View A

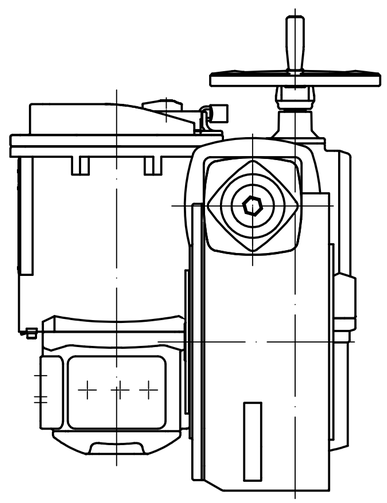

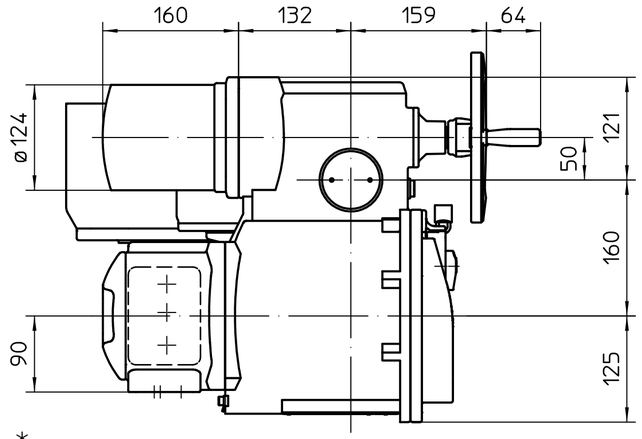

*Mounting position A

1) Thread for cable entries acc. to order acknowledgement or technical data sheet

All dimensions in mm

For all other dimensions of actuators/gearboxes, refer to the latest dimension sheet issue

State	Revision	Date	Name
01	3790/2024	2024-12-17	Gol

	Date	Name
Edited	2024-12-17	Goltsev
Checked	2024-12-18	Mayer
Rel.	2024-12-18	Goltsev

Scale 1:5

AUMA Riester GmbH & Co. KG
P.O. Box 1362
79373 Muellheim/Germany
Tel. +49 7631 809-0
Fax +49 7631 13218

auma®
AUMA Riester GmbH & Co. KG

TR-M120X
-GS160.3-F30-RR-RL

U2.7572

Page 1
Qty 1

218:1 / 442:1

This drawing is subject to the provisions on copyright protection.