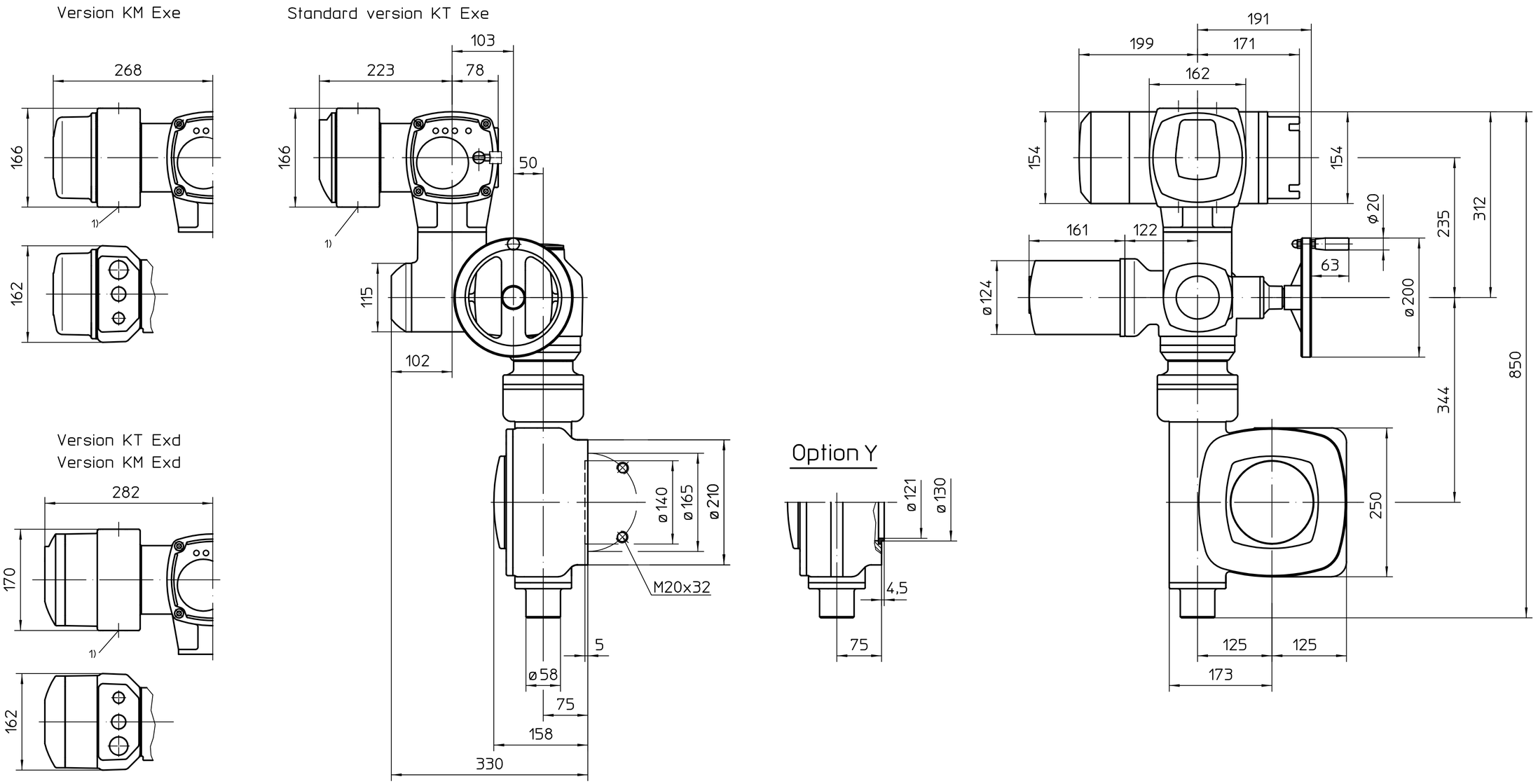

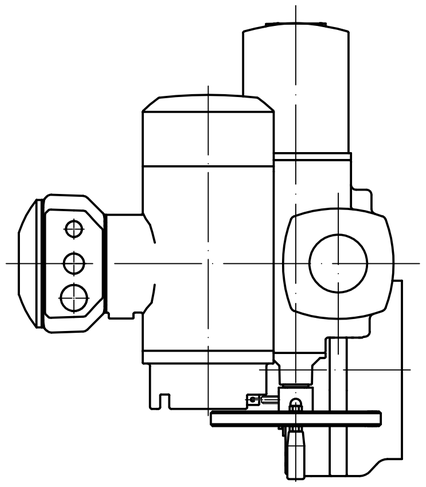

1) Thread for cable entries acc. to order acknowledgement or technical data sheet

Mounting position A

All dimensions in mm

For all other dimensions of actuators/gearboxes, refer to the latest dimension sheet issue

This drawing is subject to the provisions on copyright protection.

State	Revision	Date	Name

Scale 1:5

	Date	Name
Edited	2023-07-07	Goltsev
Checked	2023-07-07	Demir
Rel.	2023-07-07	Goltsev

AUMA Riester GmbH & Co. KG
P.O. Box 1362
79373 Muellheim/Germany
Tel. +49 7631 809-0
Fax +49 7631 13218

auma®
AUMA Riester GmbH & Co. KG

SA(R)Ex10.2-AC2
-GS125.3-F16-LL-LR

U2.7633

Page 1
Qty 1

126:1 / 160:1 / 208:1 - KT / KM