For manual operation

Groove for circlip DIN471

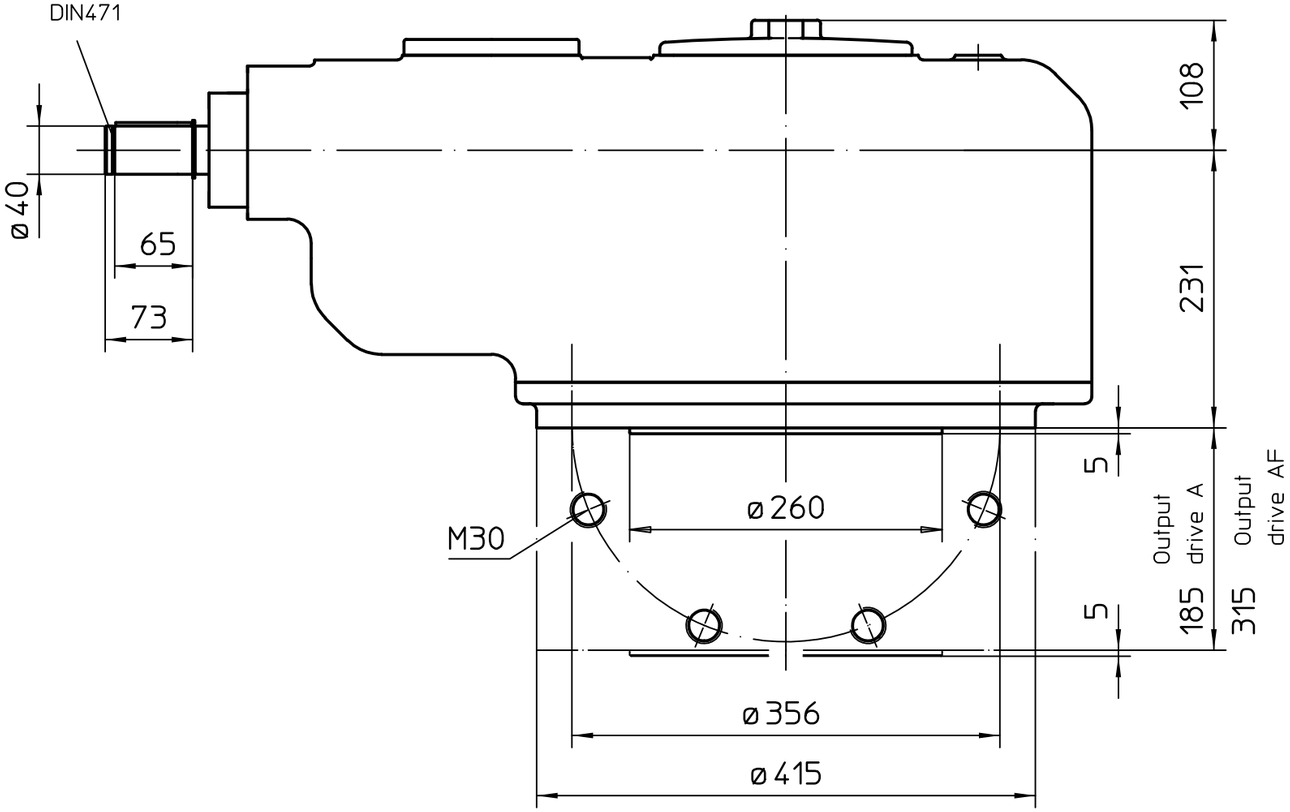

Flange for mounting multi-turn actuator

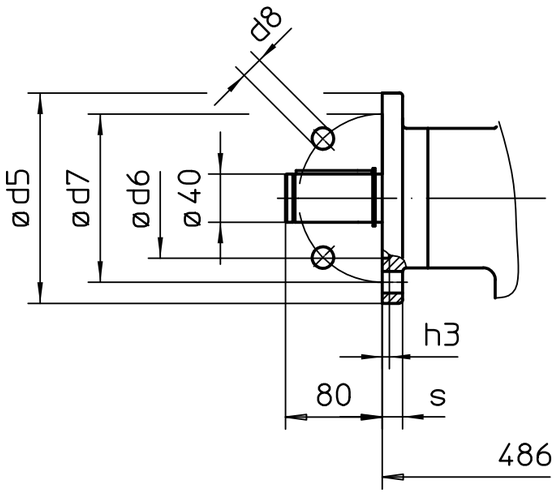

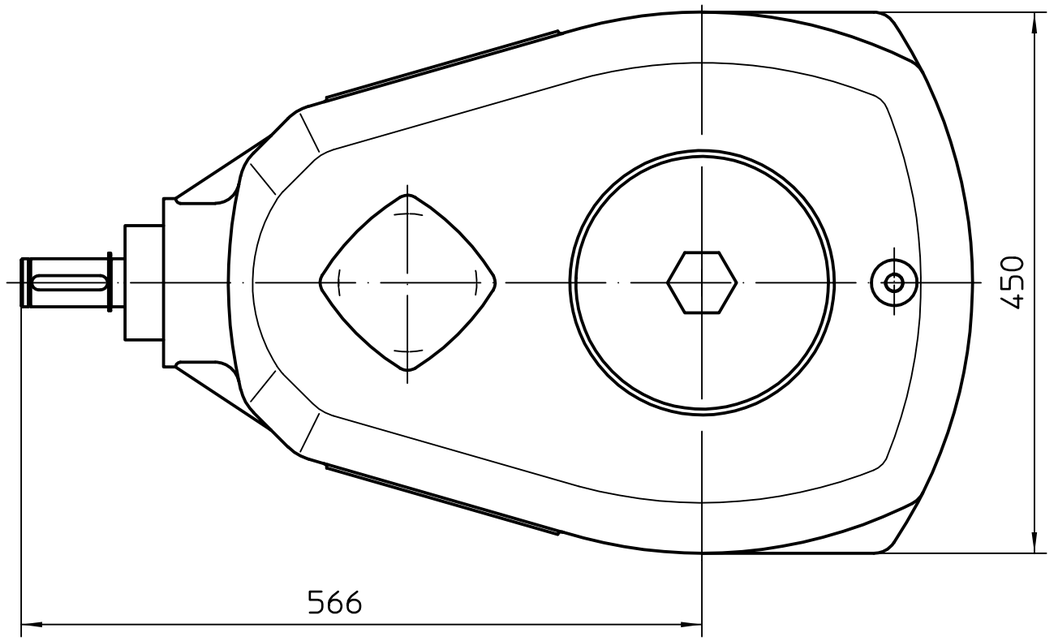

	G1/2/F14	G3/F16	F25	F30
ød5	175	210	300	350
ød6	100	130	200	230
ød7	140	165	254	298
ød8	18	22	18	22
h3	5	6	6	6
s	17	25	22	22

All dimensions in mm

For all other dimensions of actuators/gearboxes, refer to the latest dimension sheet issue

State	Revision	Date	Name
02	497/2019	2019-06-04	Gol
01	527/2012	2012-10-16	Duf

Scale 1:5

	Date	Name
Edited	2019-06-04	Goltsev
Checked	2019-06-05	Mayer
Rel.	2019-06-05	Goltsev

AUMA Riester GmbH & Co. KG
P.O. Box 1362
79373 Muellheim/Germany
Tel. +49 7631 809-0
Fax +49 7631 13218

auma®
AUMA Riester GmbH & Co. KG

GK35.2

U3.1092

Page 1
Qty 1

This drawing is subject to the provisions on copyright protection.