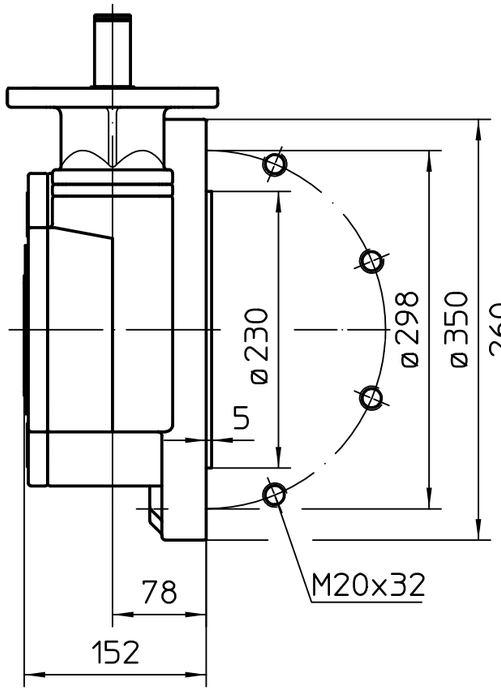

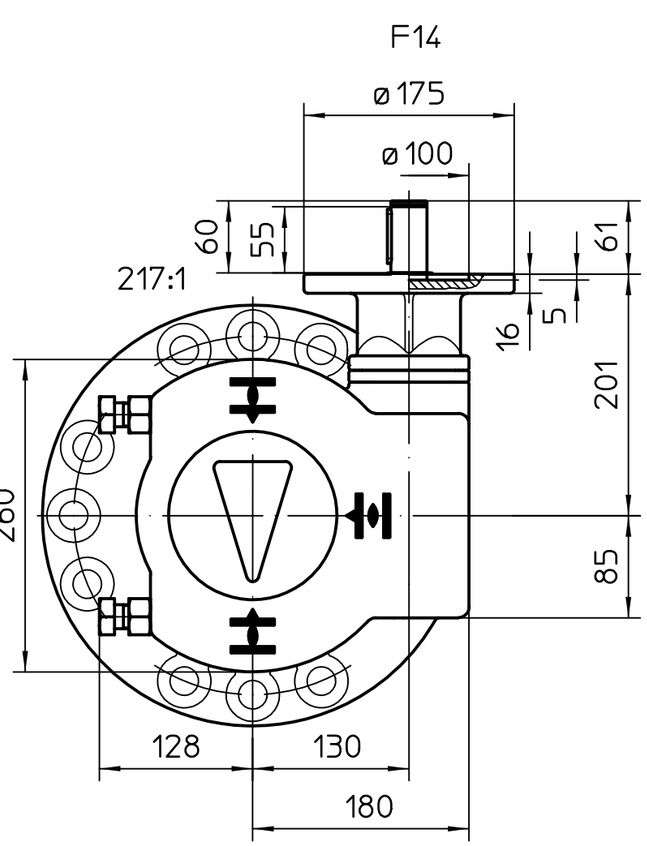

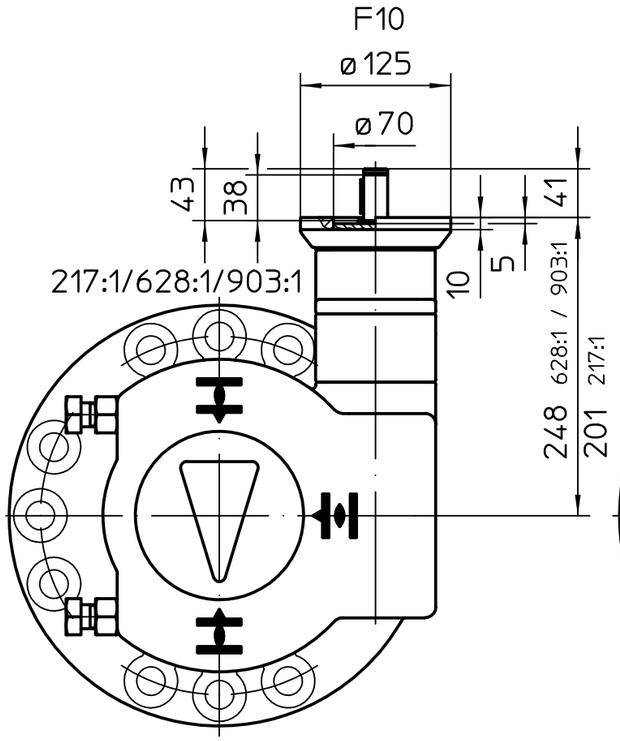

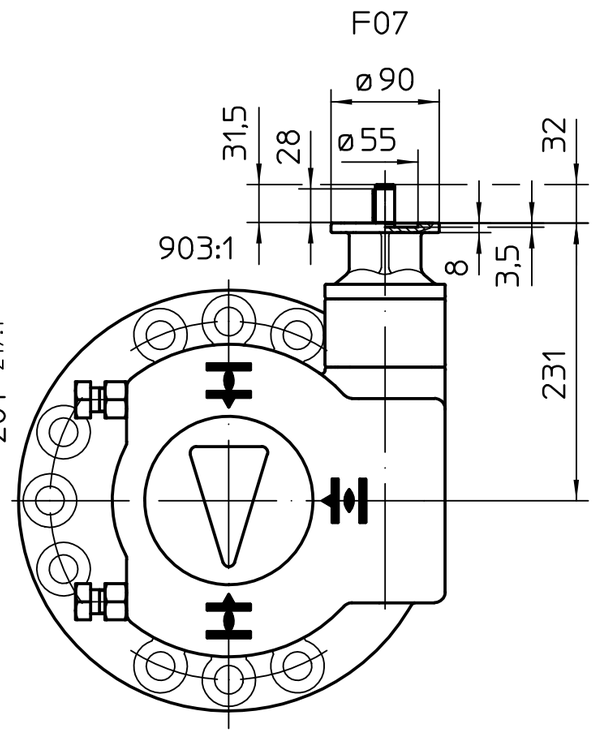

Plane flange option

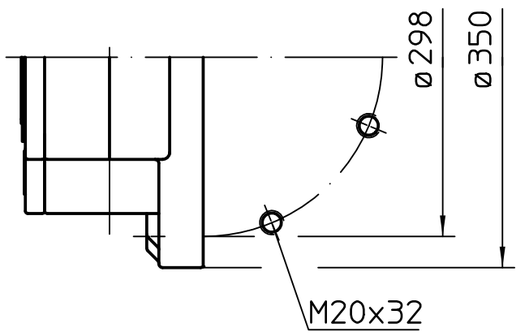

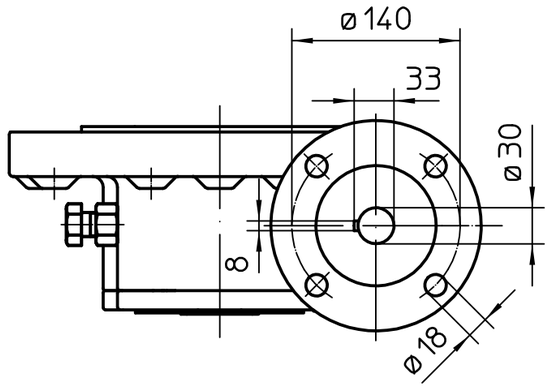

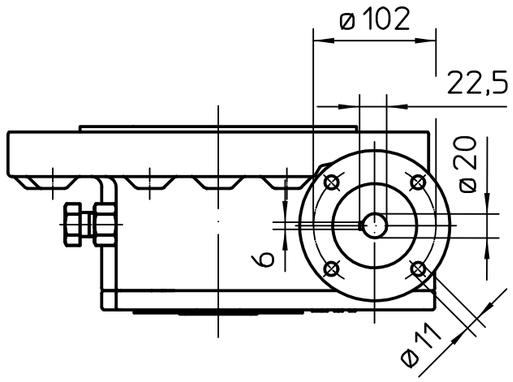

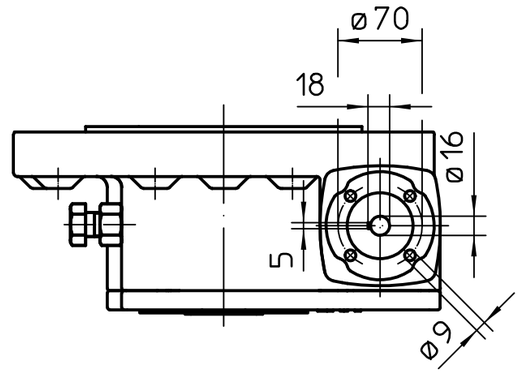

Coupling

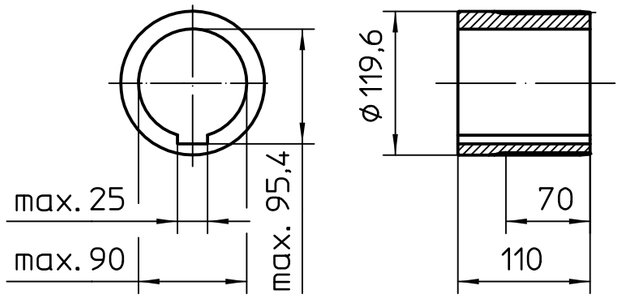

All dimensions in mm

For all other dimensions of actuators/gearboxes, refer to the latest dimension sheet issue

State	Revision	Date	Name
01	702/2019	2019-08-05	Gol

Scale 1:5

	Date	Name
Edited	2019-08-05	Goltsev
Checked	2019-08-06	Mayer
Rel.	2019-08-06	Goltsev

AUMA Riester GmbH & Co. KG
P.O. Box 1362
79373 Muellheim/Germany
Tel. +49 7631 809-0
Fax +49 7631 13218

auma®
AUMA Riester GmbH & Co. KG

GQB125.1-F30-RR-RL

U3.5717

Page 1
Qty 1

217:1 / 628:1 / 903:1

This drawing is subject to the provisions on copyright protection.