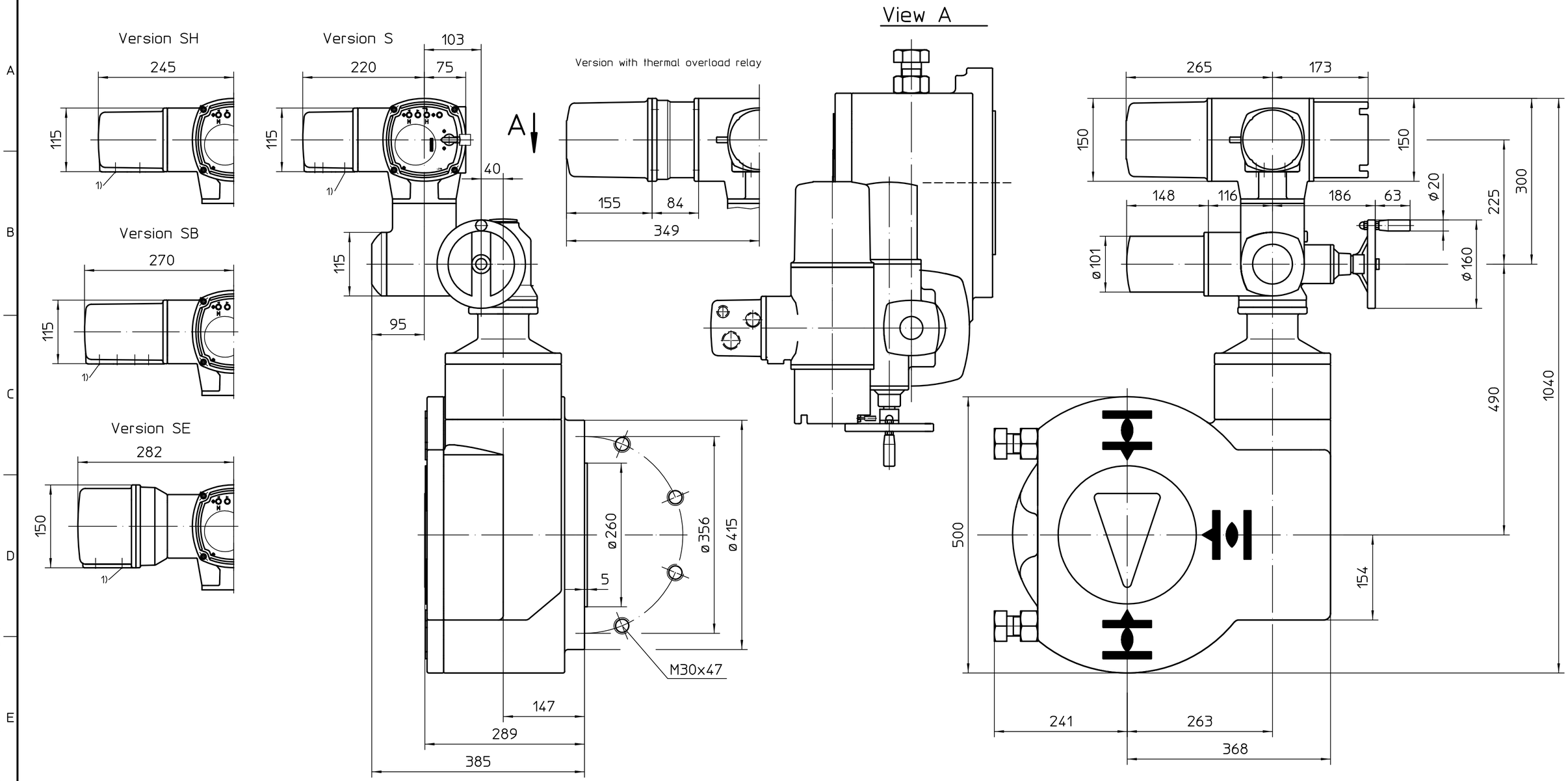

Plane flange option

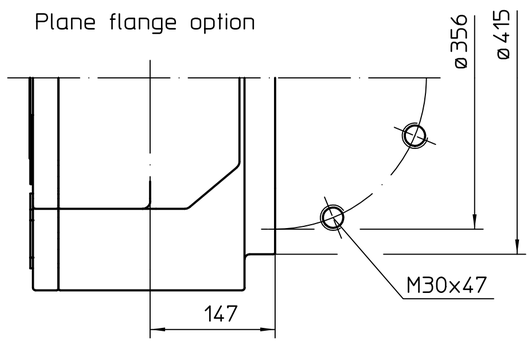

*also valid for: SA07.6
Mounting position A

1) Thread for cable entries acc. to order acknowledgement or technical data sheet

All dimensions in mm

For all other dimensions of actuators/gearboxes, refer to the latest dimension sheet issue

State	Revision	Date	Name

	Date	Name
Edited	2023-02-21	Goltsev
Checked	2023-02-22	Demir
Rel.	2023-02-23	Goltsev

AUMA Riester GmbH & Co. KG
P.O. Box 1362
79373 Muellheim/Germany
Tel. +49 7631 809-0
Fax +49 7631 13218

Scale 1:5

auma®
AUMA Riester GmbH & Co. KG

SA(R)07.2-AC2
-GQB250.1-F35-RR-RL

U2.7484

Page 1
Qty 1

* - SA07.6 - 1751:1

This drawing is subject to the provisions on copyright protection.