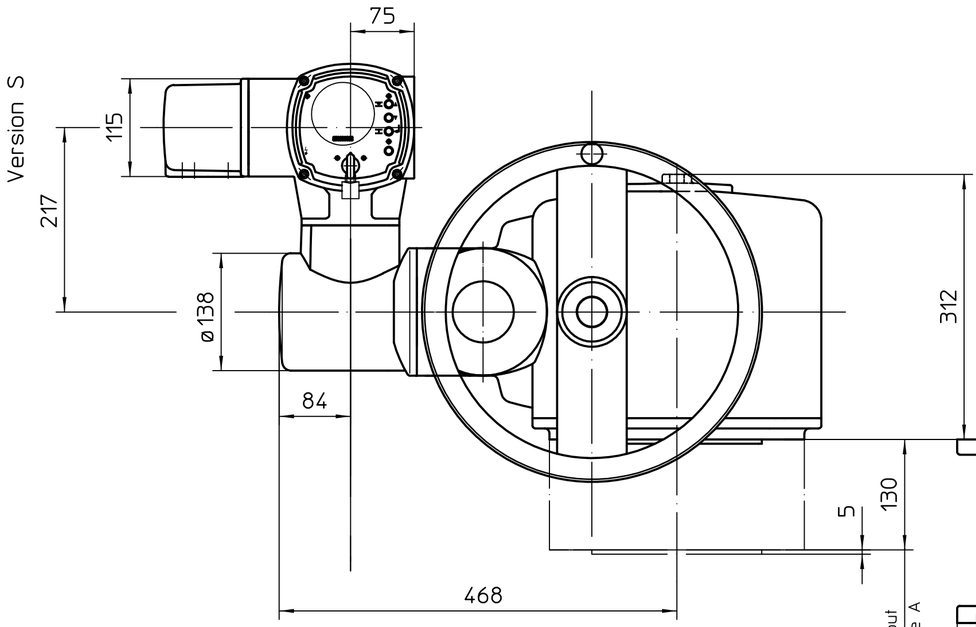

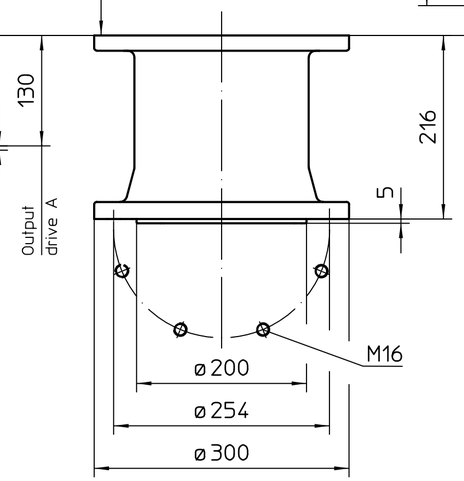

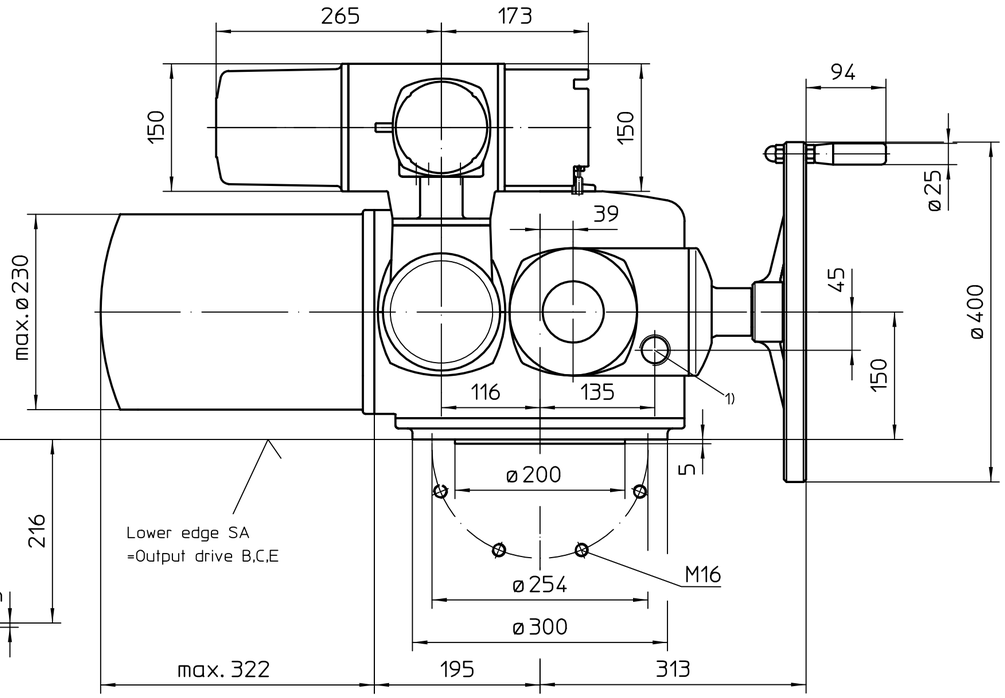

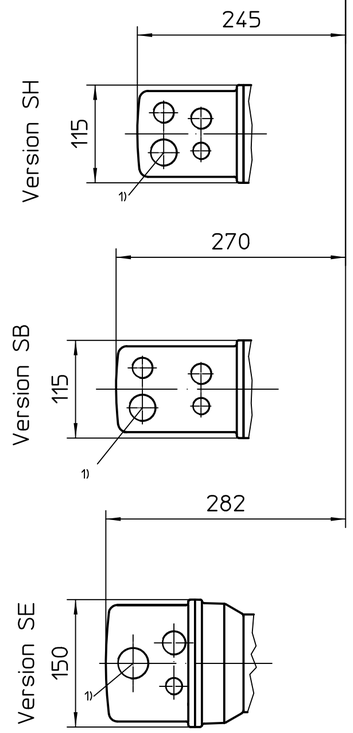

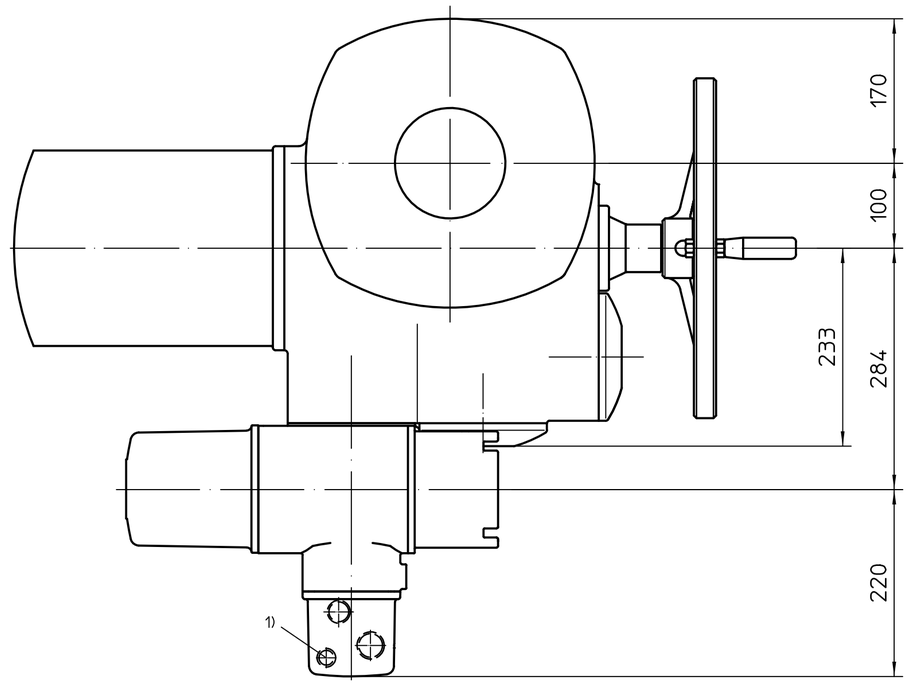

1) Thread for cable entries acc. to order acknowledgement or technical data sheet

All dimensions in mm

For all other dimensions of actuators/gearboxes, refer to the latest dimension sheet issue

State	Revision	Date	Name
00	6978/2025	2025-11-18	Vee

	Date	Name
Edited	2025-11-18	VeeraBrahman
Checked	2025-11-19	Goltsev
Rel.	2025-11-21	DivyaPrakashKS

Scale 1:5

AUMA Riester GmbH & Co. KG
P.O. Box 1362
79373 Muellheim/Germany
Tel. +49 7631 809-0
Fax +49 7631 13218

auma®
AUMA Riester GmbH & Co. KG

SA(R)25.1-AC2

U2.8365

Page 1
Qty 1

Montagewinkel

This drawing is subject to the provisions on copyright protection.