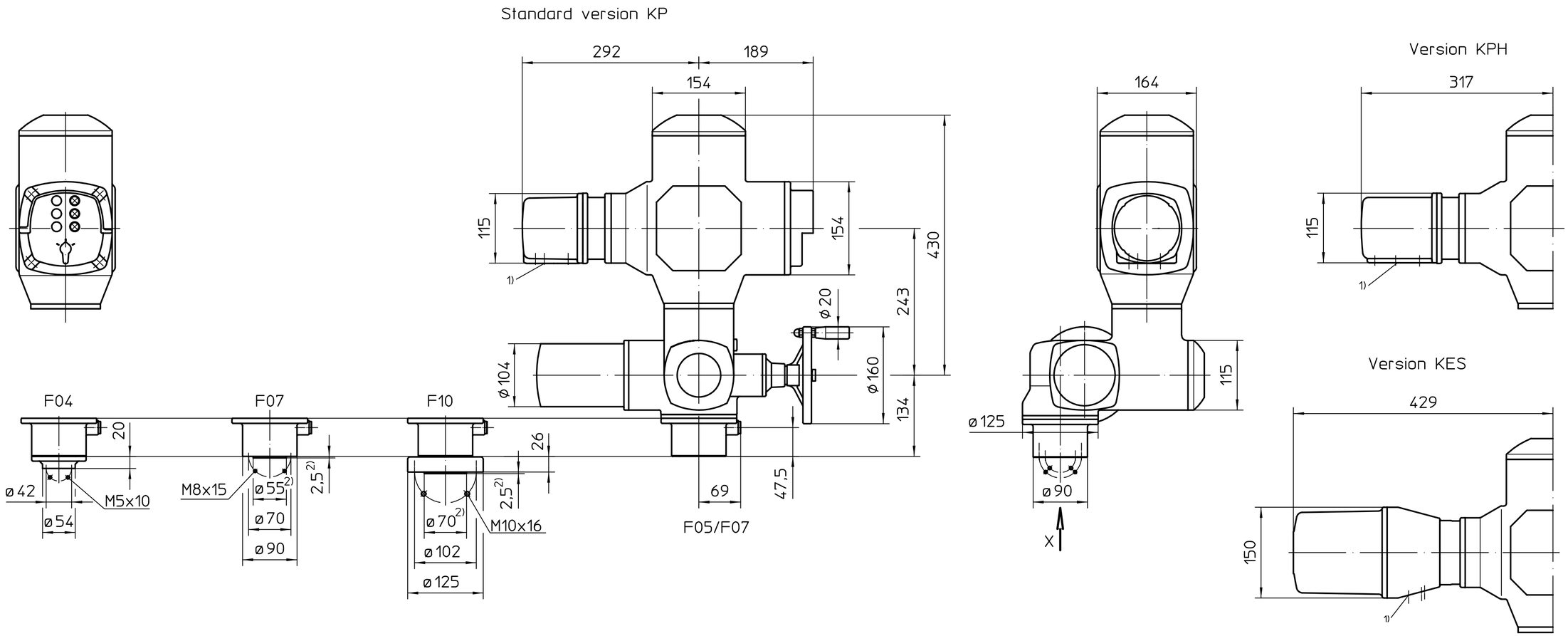

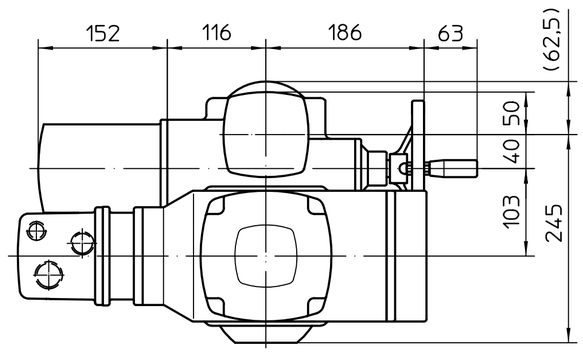

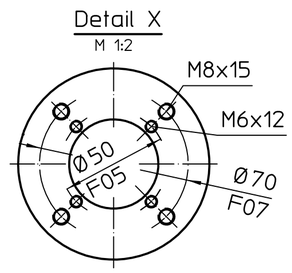

1) Thread for cable entries acc. to order acknowledgement or technical data sheet

2) Only for version with spigot
Standard without spigot: F04, combination flange F05/F07, F07, F10
Option with spigot: F07, F10

All dimensions in mm

For all other dimensions of actuators/gearboxes, refer to the latest dimension sheet issue

State	Revision	Date	Name
03	259/2019	2019-04-26	Gol
02	823/2018	2018-12-03	Gol
01	161/2014	2014-06-05	Gol

Scale 1:5

	Date	Name
Edited	2019-04-26	Goltsev
Checked	2019-05-20	Mayer
Rel.	2019-05-20	Goltsev

AUMA Riester GmbH & Co. KG
P.O. Box 1362
79373 Muellheim/Germany
Tel. +49 7631 809-0
Fax +49 7631 13218

auma®
AUMA Riester GmbH & Co. KG

SQ(R)Ex05.2/
SQ(R)Ex07.2-AM

U2.4179

Page 1
Qty 1

This drawing is subject to the provisions on copyright protection.