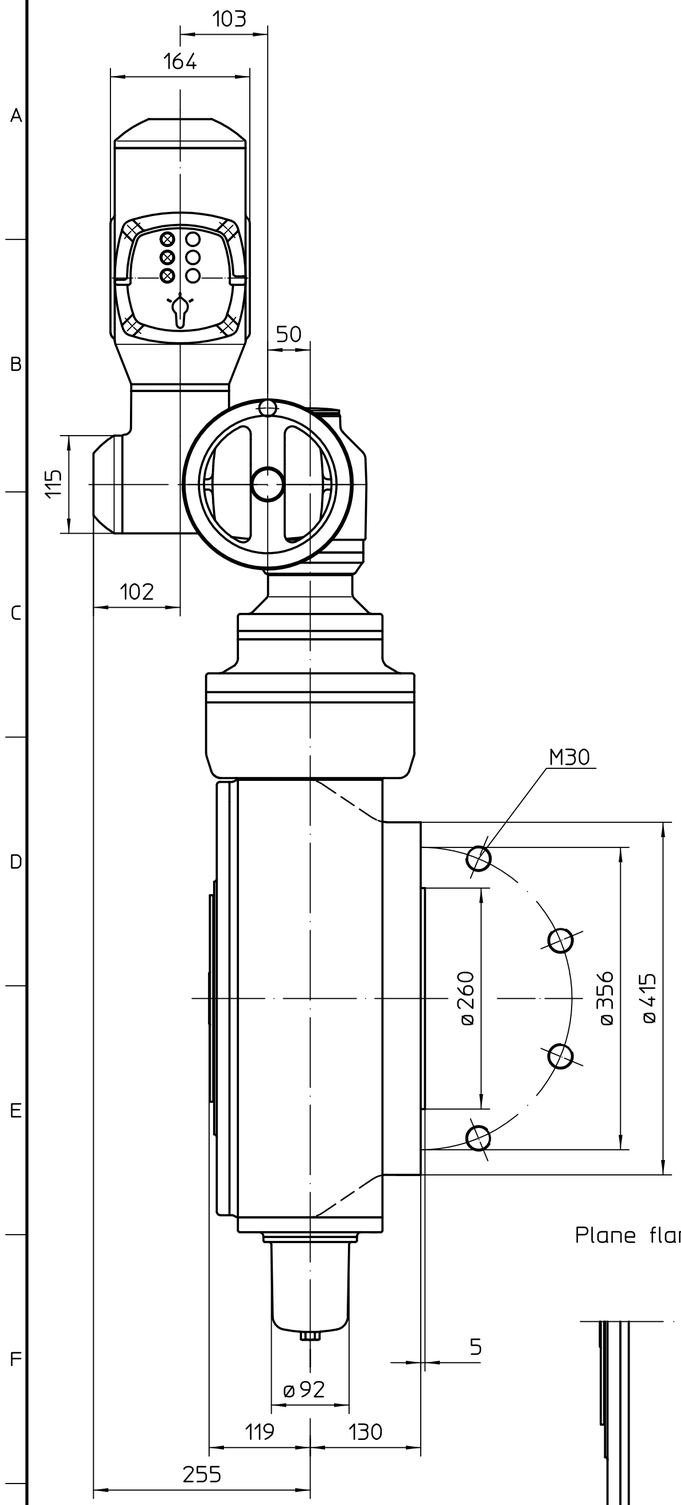

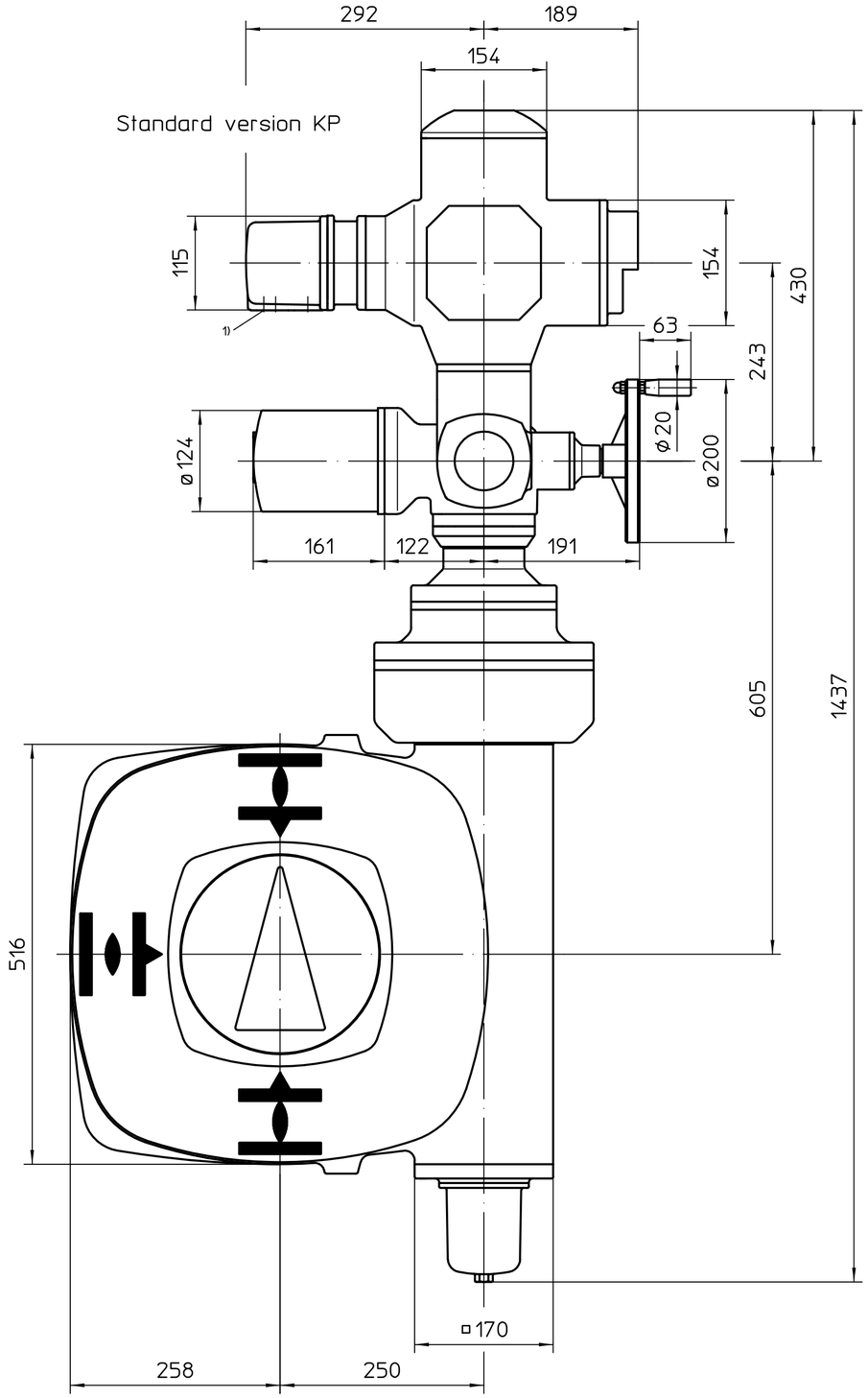

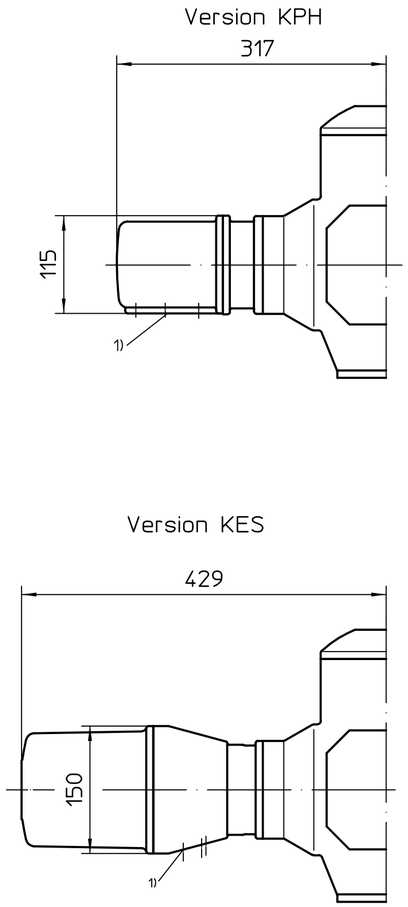

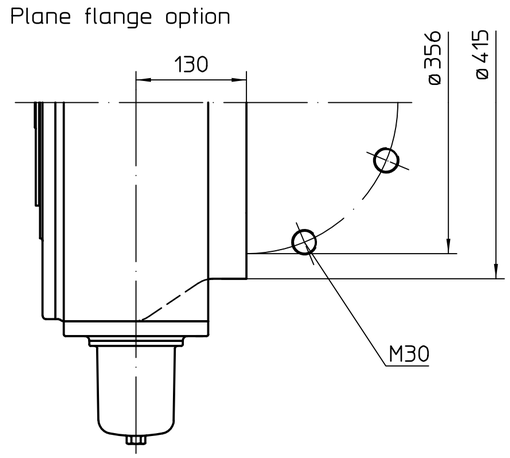

Mounting position A

1) Thread for cable entries acc. to order acknowledgement or technical data sheet

All dimensions in mm

For all other dimensions of actuators/gearboxes, refer to the latest dimension sheet issue

State	Revision	Date	Name
01	032/2019	2019-01-17	Gol

	Date	Name
Edited	2019-01-17	Goltsev
Checked	2019-01-24	Duffner
Rel.	2019-01-28	Goltsev

AUMA Riester GmbH & Co. KG
P.O. Box 1362
79373 Muellheim/Germany
Tel. +49 7631 809-0
Fax +49 7631 13218

Scale 1:5

auma®
AUMA Riester GmbH & Co. KG

SA(R)Ex10.2-AM-GS250.3
-F35-RR-RL

U2.4724

Page 1
Qty 1

848:1

This drawing is subject to the provisions on copyright protection.