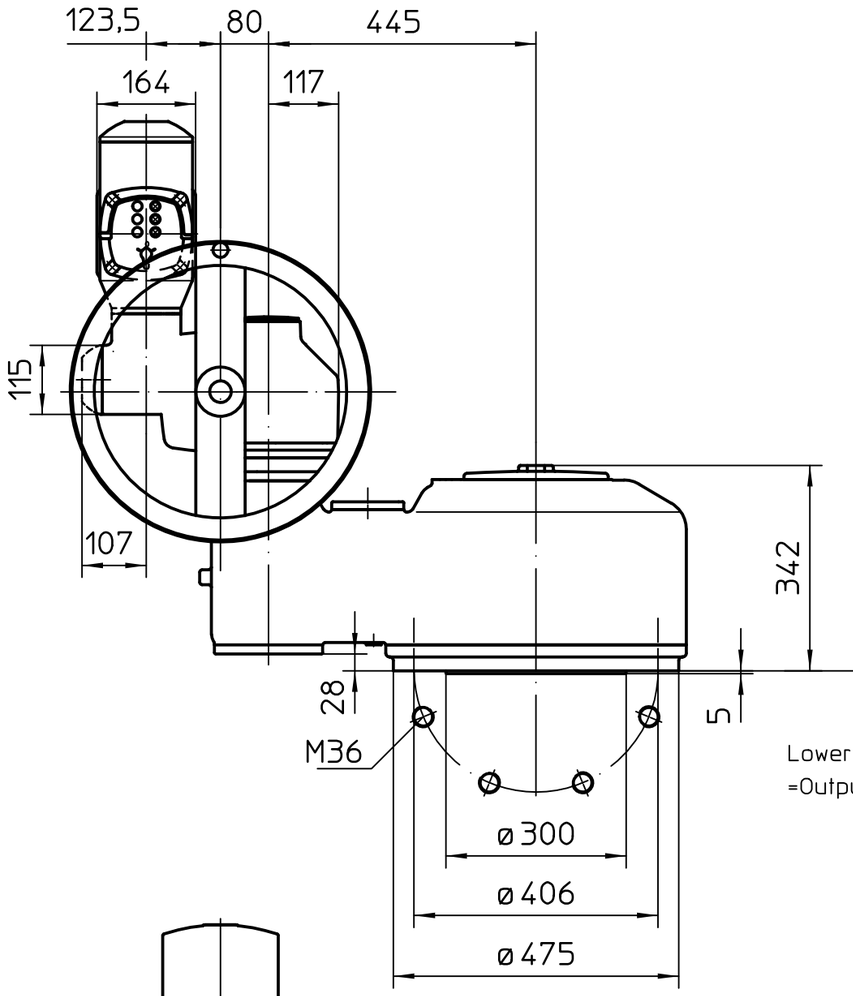

Standard version KP

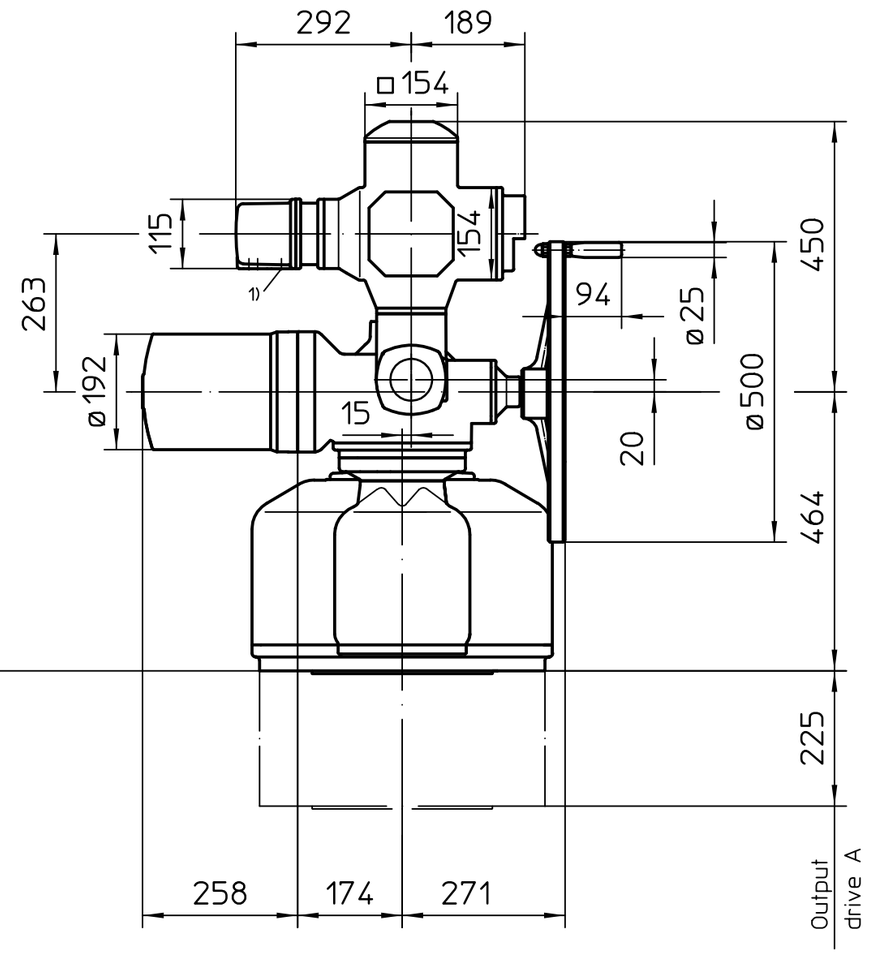

Version KPH

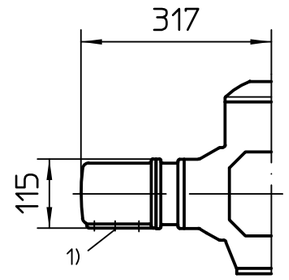

Version KES

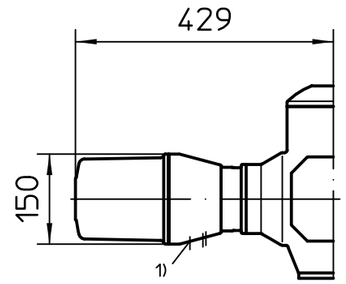

Lower edge GST
=Output drive B,C,E

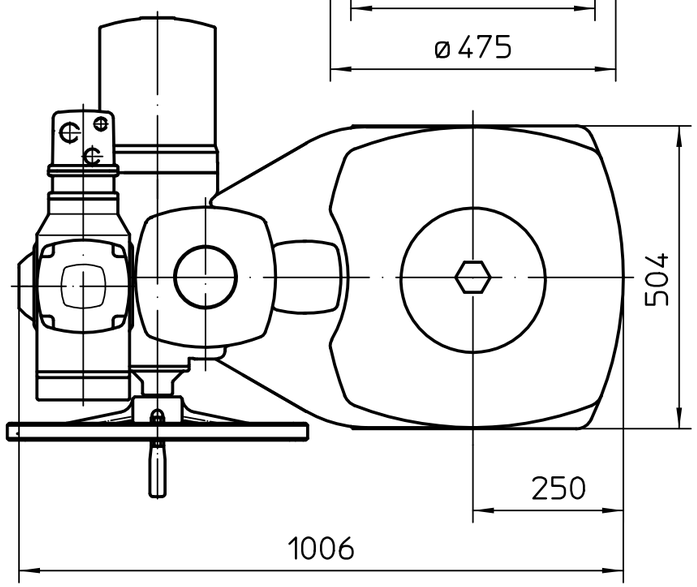

Version with second shaft end

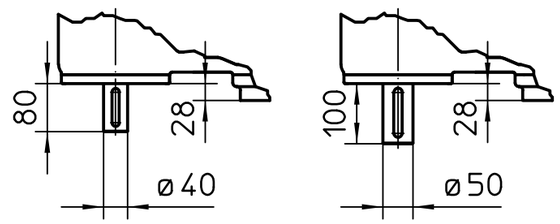

Version with protective cap

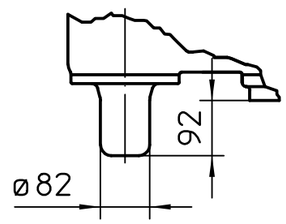

1) Thread for cable entries acc. to order acknowledgement or technical data sheet

All dimensions in mm

For all other dimensions of actuators/gearboxes, refer to the latest dimension sheet issue

State	Revision	Date	Name

Scale 1:10

	Date	Name
Edited	2018-07-19	Goltsev
Checked	2018-07-24	Duffner
Rel.	2018-07-24	Goltsev

AUMA Riester GmbH & Co. KG
P.O. Box 1362
79373 Muellheim/Germany
Tel. +49 7631 809-0
Fax +49 7631 13218

auma®
AUMA Riester GmbH & Co. KG

SA(R)Ex16.2-AM
-GST40.1

U3.5765

Page 1
Qty 1

This drawing is subject to the provisions on copyright protection.