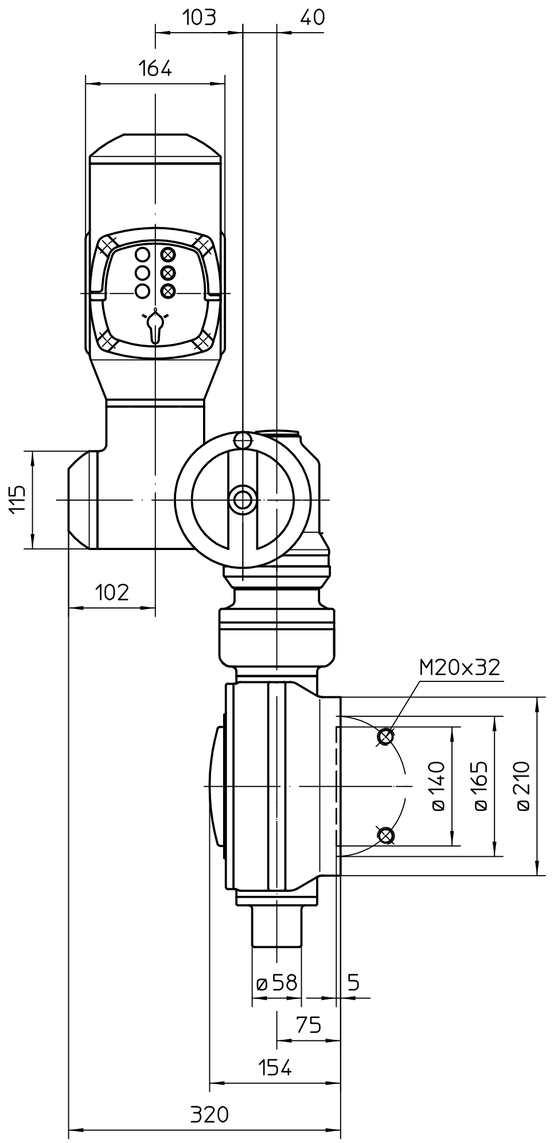

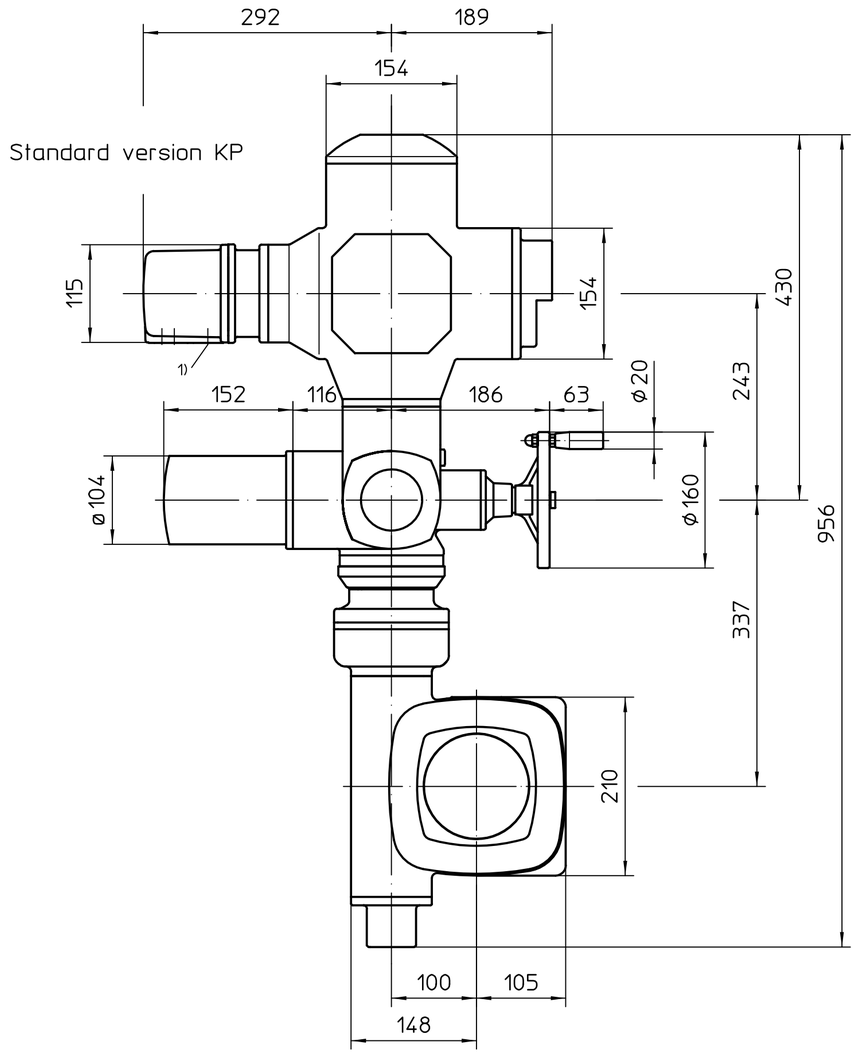

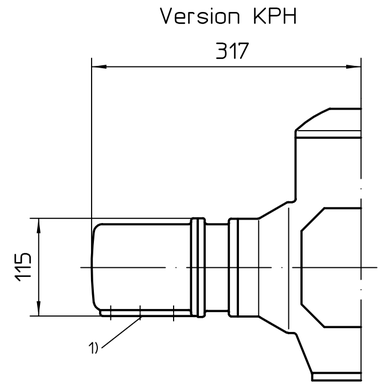

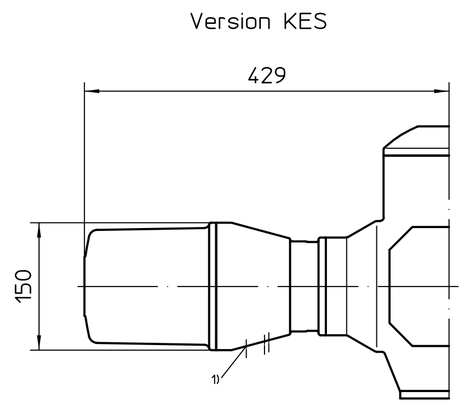

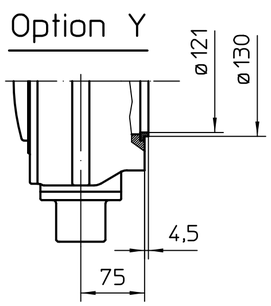

1) Thread for cable entries acc. to order acknowledgement or technical data sheet

* also valid for: SAEx07.6
Mounting position A

All dimensions in mm

For all other dimensions of actuators/gearboxes, refer to the latest dimension sheet issue

State	Revision	Date	Name

Scale 1:5

	Date	Name
Edited	2019-05-13	Goltsev
Checked	2019-05-14	Mayer
Rel.	2019-05-14	Goltsev

AUMA Riester GmbH & Co. KG
P.O. Box 1362
79373 Muellheim/Germany
Tel. +49 7631 809-0
Fax +49 7631 13218

auma®
AUMA Riester GmbH & Co. KG

SA(R)Ex07.2-AM -GS100.3-F16-LL-LR

U2.6093

Page 1
Qty 1

* - SAEx07.6 - 126:1 / 160:1 / 208:1

This drawing is subject to the provisions on copyright protection.